SMD ESD Protection Diode

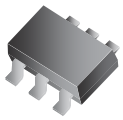

CPDT6-5V0U

RoHS Device

Features

-IEC61000-4-2 8kV(Contact), 15kV(air).

-Surface mount package.

-High component density.

Mechanical data

-Case: SOT-23-6 Standard package, molded plastic.

-Terminals: Gold plated, solderable per MIL-STD-750D, method 2026.

-Mounting position: Any.

-Approx. weight: 0.003 grams

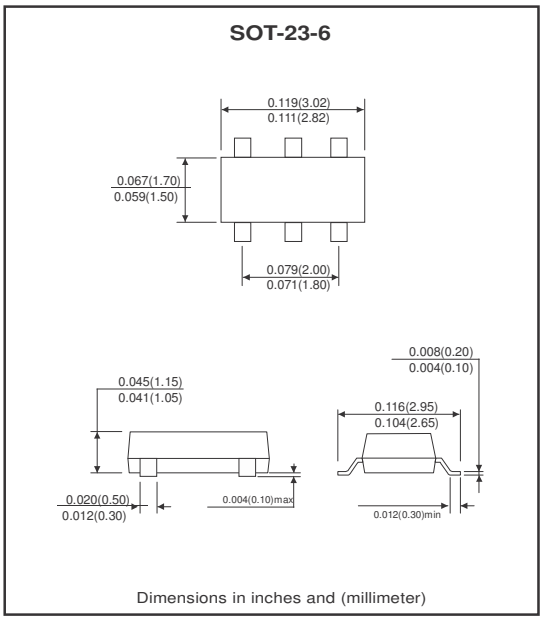

Marking: E5U

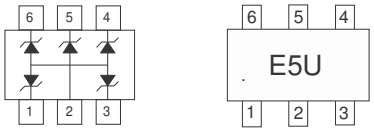

Maximum Ratings and Electrical Characteristics

At T_A=25 °C ambient temperature unless otherwise specified.

Characteristics	Symbol	Conditions	Min.	Typ.	Max.	Units
Diode breakdown voltage	V_{BD}	I_Z=1mA	6.1		7.1	V
Leakage current	I_L	V_R=3V		0.1	1.0	μA
Forward voltage	V_F	I_F=5μA			1.2	V
Junction capacitance	C_T	V_R=0V, f=1MHz		60	80	pF
Clamping voltage	V_C	I_{PP}=1A, T_P=8/20μs I_{PP}=8A, T_P=8/20μs			8 10	V
ESD capability	V_{ESD}	C=150pF, R=300Ω, forward and reverse 10 pulses	8			kV
Peak pulse power	P_{PP}				80	W
Storage temperature	T_{STG}		-55		+125	°C
Junction temperature	T_J		-55		+125	°C

RATING AND CHARACTERISTIC CURVES (**CPDT6-5V0U**)

Fig. 1 - 8/20us Peak pulse current wave form acc. IEC 61000-4-5

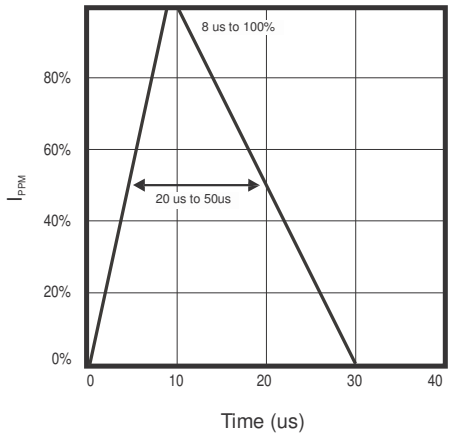

Fig. 2 - Power rating derating curve

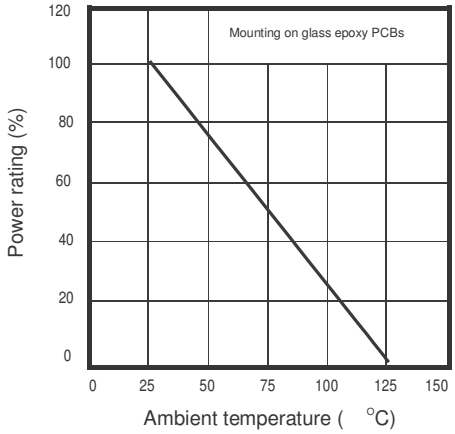

Fig. 3 - Clamping volatage vs. peak pulse current

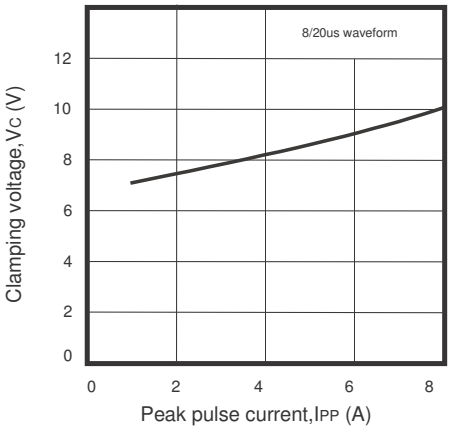

Fig. 4 - Capacitance between terminals characteristics

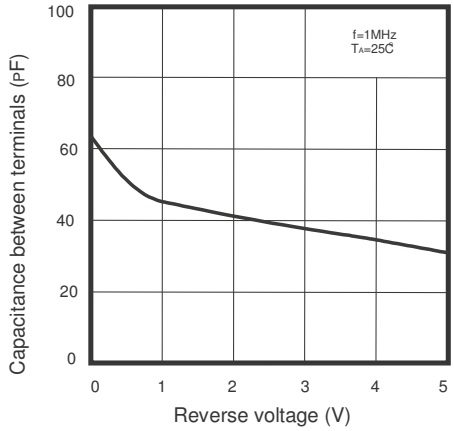

Reel Taping Specification

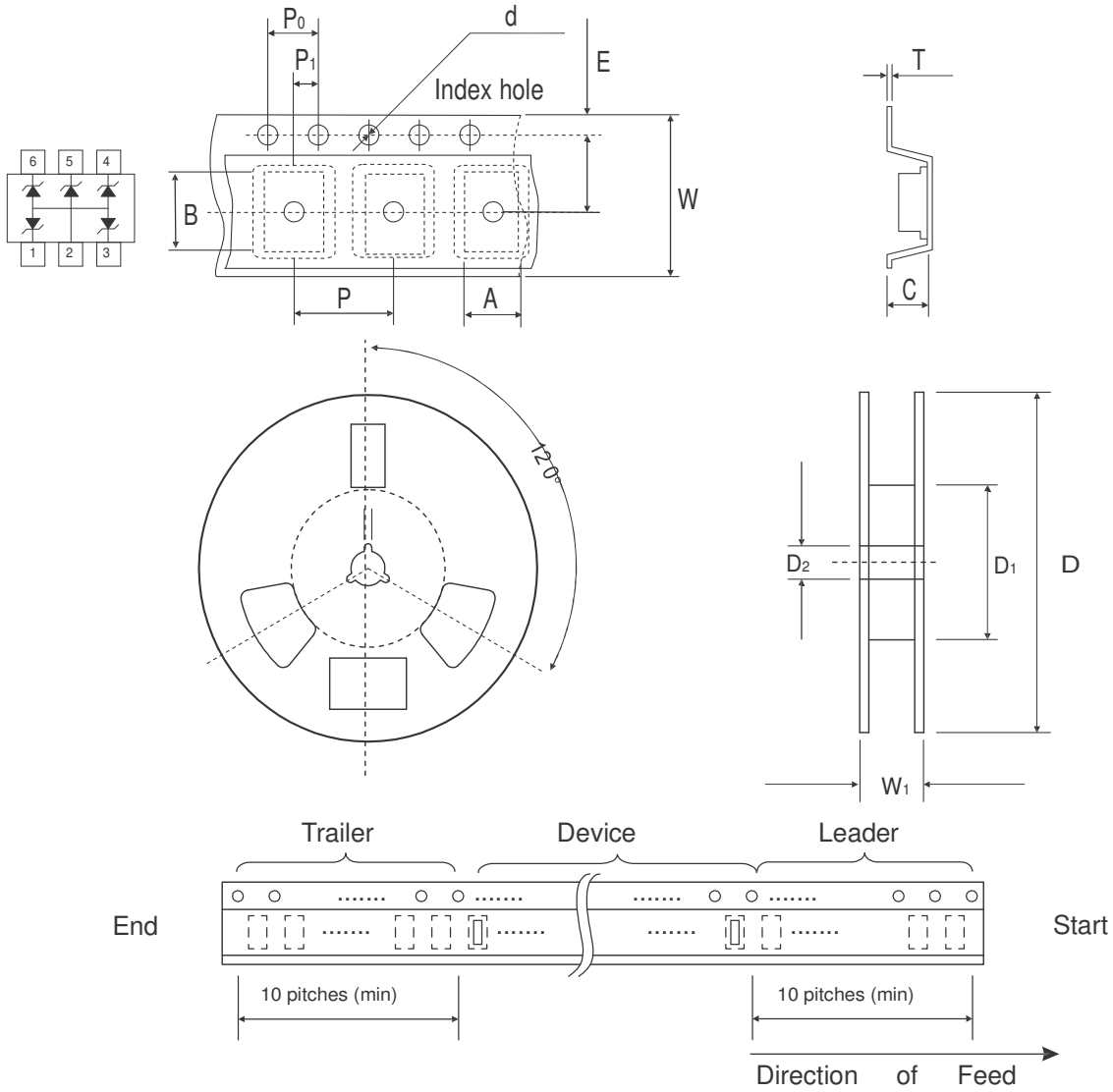

	SYMBOL	A	B	C	d	D	D_1	D_2
SOT-23-6	(mm)	3.17 ±0.10	3.23 ±0.10	1.37 ±0.10	1.55 ±0.10	178 ±1	50.0 MIN.	13.0 ±0.20
	(inch)	0.124 ±0.004	0.127 ±0.004	0.054 ±0.004	0.061 ±0.004	7.008 ±0.040	1.969 MIN.	0.512 ±0.008

	SYMBOL	E	F	P	P_0	P_1	W	W_1
SOT-23-6	(mm)	1.75 ±0.10	3.50 ±0.05	4.00 ±0.10	4.00 ±0.10	2.00 ±0.05	8.00 ±0.30	14.4 MAX.
	(inch)	0.069 ±0.004	0.138 ±0.002	0.157 ±0.004	0.157 ±0.004	0.079 ±0.002	0.315 ±0.012	0.567 MAX

Marking Code

Park Number	Marking Code
CPDT6-5V0U	E5U

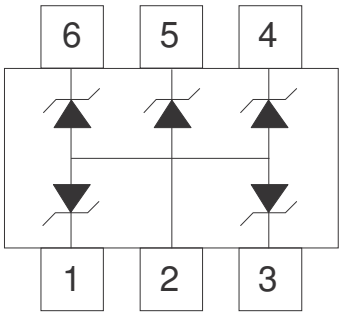

Suggested PAD Layout

SIZE	SOT-23-6	
	(mm)	(inch)
A	1.10	0.043
B	0.60	0.024
C	0.95	0.037
D	2.50	0.098
E	5.00	0.196

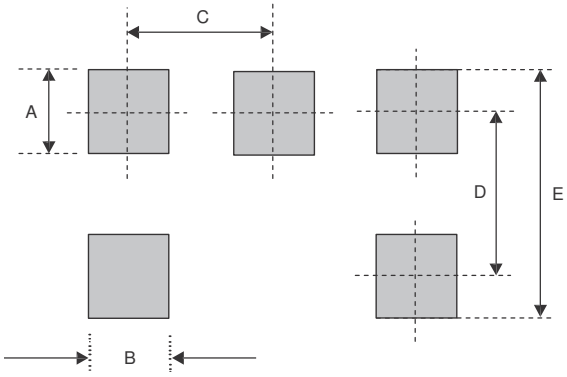

Standard Package

Case Type	Qty per Reel	Reel Size
	(Pcs)	(inch)
SOT-23-6	3000	7