CPDV3-5V0U

RoHS Device

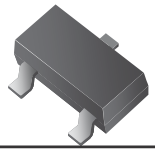

Features

-IEC61000-4-2 8kV(Contact), 15kV(air).

-Surface mount package.

-High component density.

Mechanical data

-Case: SOT-323 Standard package, molded plastic.

-Terminals: Gold plated, solderable per MIL-STD-750D, method 2026.

-Marking code: E5U

-Mounting position: Any.

-Weight: 0.0055 gram (approx.).

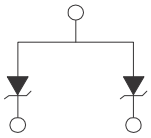

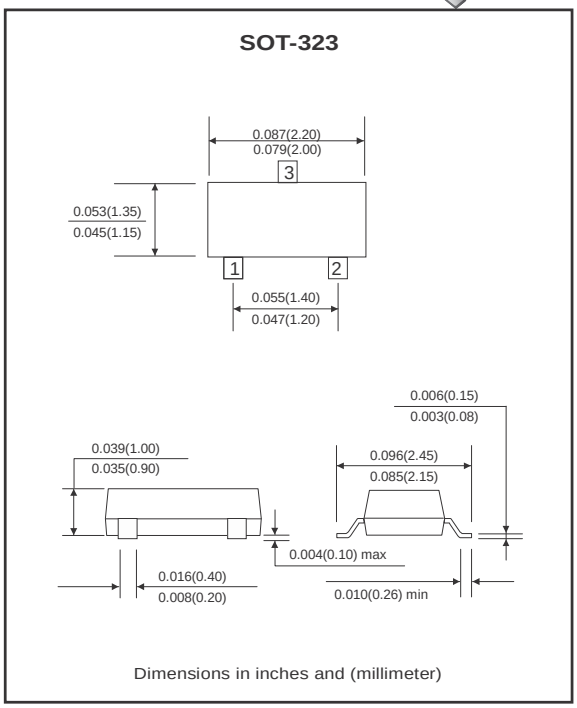

Maximum Rating and Electrical Characteristics
(at T_A=25℃ unless otherwise noted)

Parameter	Symbol	Conditions	Min	Typ	Max	Unit
Diode breakdown voltage	V_{BD}	I_R = 1mA	6.1		7.1	V
Leakage current	I_L	V_R = 3V		0.1	1.0	uA
Forward voltage	V_F	I_F = 5uA			1.2	V
Junction capacitance	C_T	V_R = 0V,f = 1MHz		60	80	pF
Clamping voltage	V_C	I_{PP} = 1A,T_P=8/20us I_{PP} = 8A,T_P=8/20us			8 10	V
ESD capability	ESD	C = 150pF, R = 300ohm, forward and reverse 10 pulses	8			kV
Peak pulse power	P_{PP}				80	W
Operation temperature	T_J				125	℃
Storage temperature	T_{STG}		-55		150	℃

RATING AND CHARACTERISTIC CURVES (CPDV3-5V0U)

Fig. 1 - 8/20us Peak pulse current wave form acc. IEC 61000-4-5

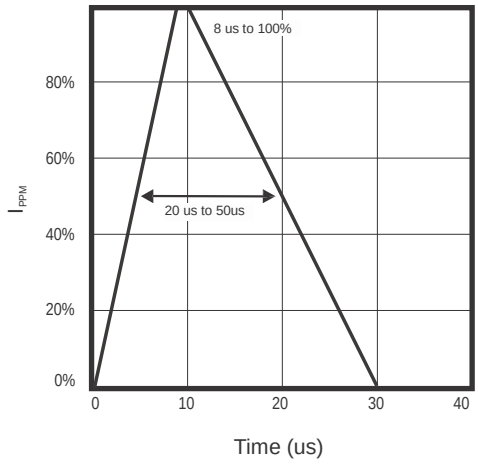

Fig. 2 - Power rating derating curve

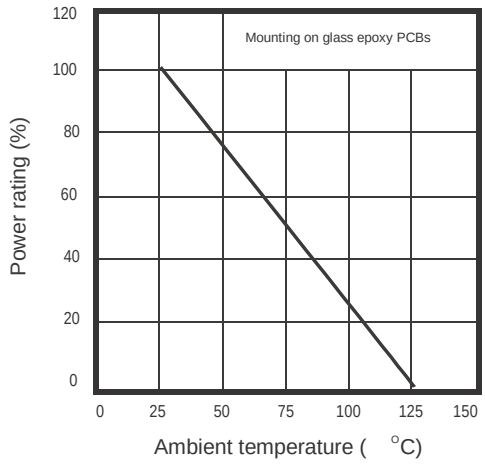

Fig. 3 - Clamping volatage vs. peak pulse current

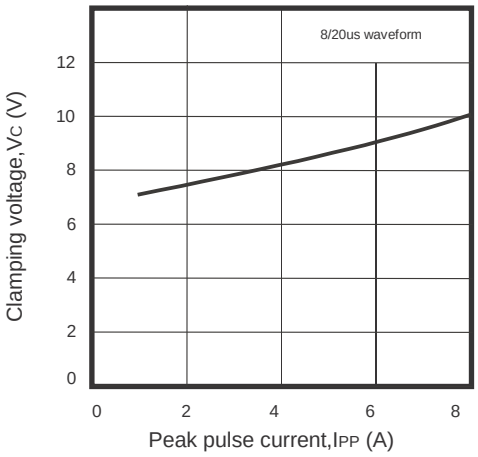

Fig. 4 - Capacitance between terminals characteristics

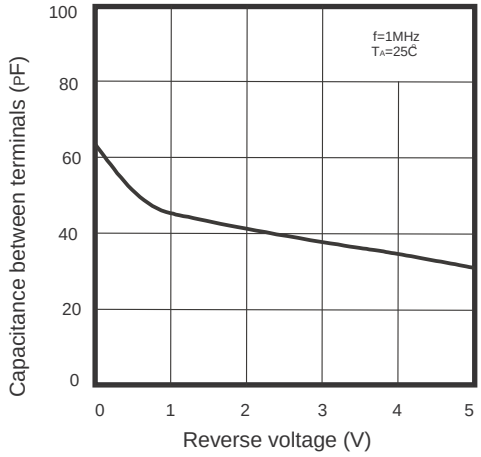

Reel Taping Specification

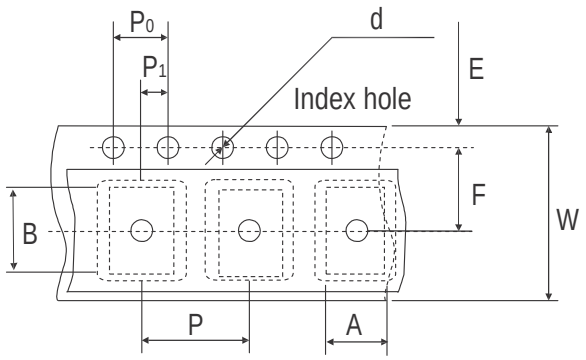

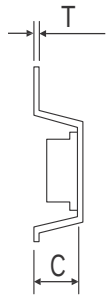

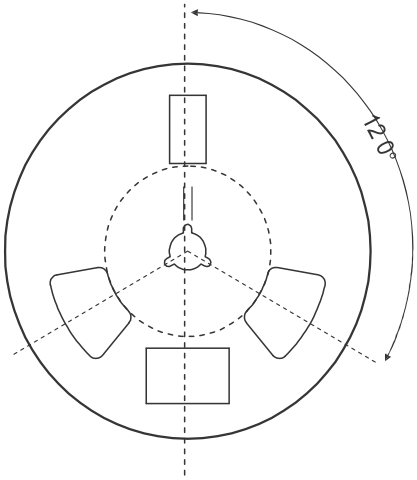

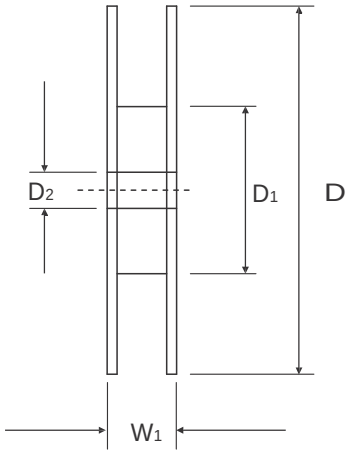

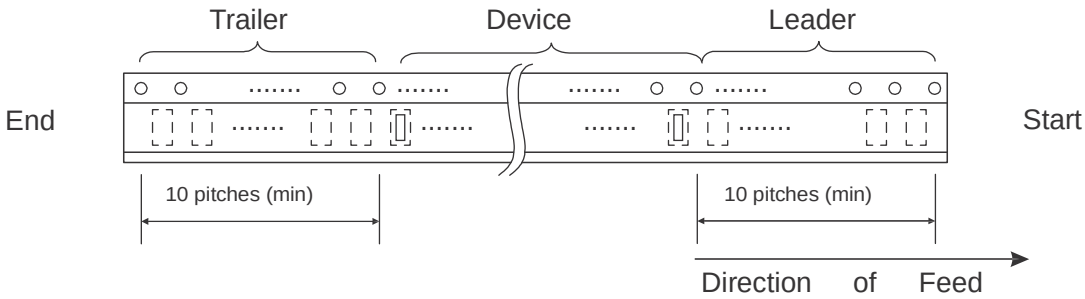

	SYMBOL	A	B	C	d	D	D1	D2
SOT-323	(mm)	2.20 ±0.10	2.40 ±0.10	1.15 ±0.10	1.55 ±0.10	178 ±1	50.0 MIN.	13.0 ±0.20
	(inch)	0.087 ±0.004	0.094 ±0.004	0.045 ±0.004	0.061 ±0.004	7.008 ±0.040	1.969 MIN.	0.512 ±0.008

	SYMBOL	E	F	P	P0	P1	W	W1
SOT-323	(mm)	1.75 ±0.10	3.50 ±0.05	4.00 ±0.10	4.00 ±0.10	2.00 ±0.05	8.00 ±0.30	14.4 MAX.
	(inch)	0.069 ±0.004	0.138 ±0.002	0.157 ±0.004	0.157 ±0.004	0.079 ±0.002	0.315 ±0.012	0.567 MAX

Marking Code

Part Number	Marking Code
CPDV3-5V0U	E5U

Suggested PAD Layout

SIZE	SOT-323	
	(mm)	(inch)
A	0.80	0.031
B	1.45	0.057
C	1.94	0.076
D	2.74	0.108

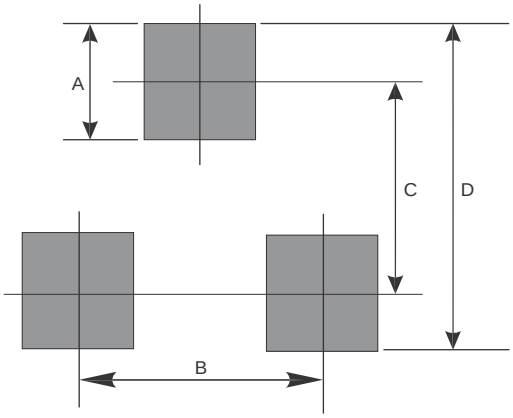

Standard Package

Case Type	Qty per Reel	Reel Size
	(Pcs)	(inch)
SOT-323	3000	7